PARTS MANUAL

P2.0S FBW - P2.0S FBW FIXED (D439)

CUSTOMER EDITION

HYSTER

4020150
10/2015

©2015 HYSTER COMPANY

SECTIONS

1	FRAME/DRIVE UNIT
2	OPERATOR COMPARTMENT
3	ELECTRICAL SYSTEM
4	STEER HANDLE/BRAKE SYSTEM
5	LIFT LINKAGE AND FORKS
6	LOAD WHEELS
7	HYDRAULIC SYSTEM
8	LIFT CYLINDERS
9	ACCESSORIES
10	NUMERICAL INDEX

This Parts Manual is divided into 10 major sections which are listed above. Quick reference to these sections can be made by placing the right thumb on the tab of the desired section, bending the book back and thumbing the pages to the corresponding tab.

Thanks very much for your reading,

Want to get more information,

Please click here, Then get the complete manual

JustClickHere

NOTE:

If there is no response to click on the link above, please download the PDF document first, and then click on it.

Have any questions please write to me:
admin@servicemanualperfect.com

TABLE OF CONTENTS

DESCRIPTION	PAGE
A	
ADJUSTABLE TIE RODS	
OPTION (→ S/N D439T03197L)	5-10
OPTION (S/N D439T03198L →)	5-14
B	
BATTERY COMPARTMENT	
LATERAL BATTERY REMOVAL - OPTION	1-6
VERTICAL BATTERY REMOVAL	1-4
BATTERY STOP	1-8
C	
CASTER WHEELS	1-34
CONNECTORS CONTACTS TOOLS	3-20
CONTROL BOX	
→ S/N D439T02871K EXC. 02866-02868	4-8
S/N D439T02874K ↔ S/N D439T03760M INC. 02866-02868	4-10
S/N D439T03761M →	4-12
FOR MODELS WITH SCOOTER CONTROL - OPTION (→ S/N D439T03760M)	4-14
COVERS	1-2
D	
DOUBLE BATTERY TRAY	
FOR MODELS WITH BATTERY 210/250AH - OPTION	9-4
FOR MODELS WITH BATTERY 300/400/500AH - OPTION	9-6
E	
ELECTRICAL ARRANGEMENT	3-2
ELECTROMAGNETIC BRAKE	
→ S/N D439T03590L	4-18
S/N D439T03591L →	4-20
F	
FAN	
OPTION	3-6
FIXED REAR PROTECTION	
WITH FOLDABLE PLATFORM - OPTION (→ S/N D439T03920M)	2-14
WITH FOLDABLE PLATFORM - OPTION (S/N D439T03921M ↔ 8/2015)	2-16
WITH FOLDABLE PLATFORM - OPTION (9/2015 →)	2-18
FIXED SIDE PROTECTION	
WITH FOLDABLE PLATFORM - OPTION (→ S/N D439T03920M)	2-10
WITH FOLDABLE PLATFORM - OPTION (S/N D439T03921M →)	2-12
G	
GUARD	
S/N D439T03156L →	2-4
H	
HYDRAULIC POWER UNIT	7-4
HYDRAULIC SYSTEM	7-2

TABLE OF CONTENTS (continued)

DESCRIPTION **PAGE**

K

KEY PAD
OPTION 3-5
KIT-GEAR AND PINION
S/N D439T03591L → 1-26

L

LABEL 1-38
OPTION - ONLY FOR SUNLIGHT BATTERY 1-39
LABELS 1-36
→ S/N D439T03760M 4-16
S/N D439T03761M → 4-17
LEAD-IN ROLLERS
ONLY FOR UK FORKS - OPTION 5-17
LIFT CYLINDER 8-2
LOAD BACKREST
VERTICAL BATTERY REMOVAL - OPTION 1-10
LOAD WHEELS
HEAVY DUTY - OPTION 6-7
SINGLE - OPTION 6-3
TANDEM 6-2
TWIN SINGLE - OPTION 6-5
TWIN TANDEM - OPTION 6-4
VEGETABLE MARKET - OPTION 6-6

M

MASTER DRIVE UNIT
→ S/N D439T03590L 1-12
S/N D439T03591L → 1-14

O

OPERATOR PLATFORM 2-6
COLD STORE - OPTION 2-8

P

PAPER HOLDER
OPTION 2-20

R

REDUCTION UNIT
→ S/N D439T03590L 1-20
S/N D439T03591L → 1-24

S

SIDE GATES 2-2
SINGLE BATTERY TRAY
OPTION 9-2
STEERING 4-2
FOR MODELS WITH SCOOTER CONTROL - OPTION 4-6
STEERING MOTOR 1-27

©2015 HYSTER COMPANY

TABLE OF CONTENTS (continued)

DESCRIPTION	PAGE
SUPPORT AND CASTER WHEELS	
LINKED	1-30
SUPPORTS AND CASTER WHEELS	
INDEPENDENT	1-32
T	
TELEMETRY	
LEVEL 1 - MONITORING - OPTION	3-8
LEVEL 2 - ACCESS - OPTION	3-10
LEVEL 3 - VERIFICATION - OPTION	3-12
WIRE HARNESS - OPTION	3-14
TELEMETRY LABEL	
OPTION	3-17
TIE RODS	
FORKS LENGTH GREATER THAN 1600MM (→ S/N D439T03197L)	5-6
FORKS LENGTH GREATER THAN 1600MM (S/N D439T03198L →)	5-8
FORKS LENGTH LESS THAN OR EQUAL TO 1600MM (→ S/N D439T03197L)	5-2
FORKS LENGTH LESS THAN OR EQUAL TO 1600MM (S/N D439T03198L →)	5-4
TRACTION MOTOR	
→ S/N D439T03590L	1-16
S/N D439T03591L →	1-18
W	
WHEEL PROTECTION	
OPTION	1-28

ABBREVIATIONS QUICK REFERENCE SHEET

Listed below are abbreviations used in parts manuals to denote the following expressions:

TERM	DEFINITION
Amp	Amperes
AR	As Required
BDI	Battery Discharge Indicators
BWI	Brush Wear Indicator
CE	Communicator End
CRE	Corrosive Environment
D/B	Date Break
dbA	Decibel "A" Scale
DE	Drive End
ECH	Empty Container Handler
ECH-3	Empty Container Handler - 3 High Stacking
ECH-4	Empty Container Handler - 4 High Stacking
ECH-5	Empty Container Handler - 5 High Stacking
ECH-6	Empty Container Handler - 6 High Stacking
ECH-7	Empty Container Handler - 7 High Stacking
ECM	Electronic Control Module
ECN	Engineering Change Notice
EEPROM	Electrically Erasable Programmable Read Only Memory
EPA	US Environmental Protection Agency
EPROM	Electrically Programmable Read Only Memory

TERM	DEFINITION
FRE	Freezer Environment
in.	inches
LPG	Liquefied Petroleum Gas
MAP	Manifold Absolute Pressure
mm	millimeters
MSTS	Microprocessor Spark Timing System
NPT	National Pipe Threads
O/S	Oversize
PTO	Power Take Off
RPM	Revolutions per Minute
S/N	Serial Number
TMM	Truck Management Module
UL Type D	Diesel-Powered Safety Rating
UL Type DS	Diesel-Powered Safety Rating
UL Type E	Battery-Powered Safety Rating
UL Type EE	Battery-Powered Safety Rating
UL Type ES	Battery-Powered Safety Rating
UL Type G	Gasoline-Powered Safety Rating
UL Type GS	Gasoline-Powered Safety Rating
UL Type LP	Gas-Powered Safety Rating
UL Type LPS	LP Gas-Powered Safety Rating
U/S	Undersize
UL	Underwriters Laboratory
V	Volts

©2015 HYSTER COMPANY

HOW TO USE THE ILLUSTRATED PARTS MANUAL

This parts manual describes and illustrates assemblies, subassemblies, and detail parts needed for service replacement.

The different constructions are indicated by keys and footnotes. The callouts correspond to descriptions found on the next page.

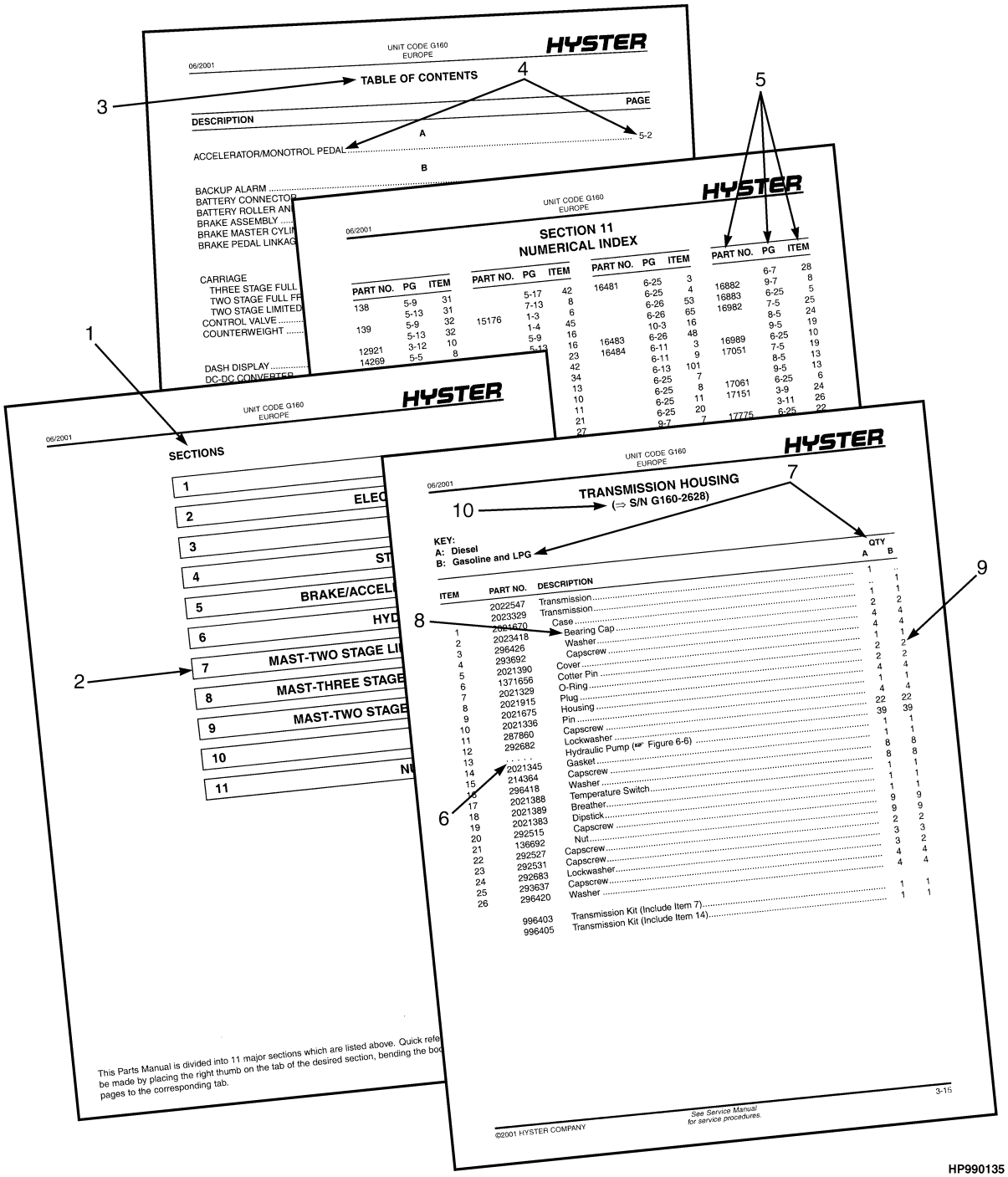

HP990135

HOW TO FIND THE DESIRED PART NUMBER

WHEN THE PART NUMBER AND THE NEXT HIGHER ASSEMBLY IS NOT KNOWN:

1. Determine the function and application of the part required. Turn to the Sections Page. Choose the general area of reference most likely to include the part.
2. Turn to the section you chose. Use the Section Table of Contents to determine the assembly which would normally contain the part required. Then locate the part on the assembly breakdown page.

WHEN THE PART NUMBER IS NOT KNOWN AND THE NEXT HIGHER ASSEMBLY IS KNOWN:

3. Determine the assembly the required part is used on. Turn to the Table of Contents (Page i).
4. Locate the assembly the required part is used on and turn to the page indicated for that assembly. Then locate the part on the assembly breakdown page.

WHEN THE PART NUMBER IS KNOWN:

5. Use the Numerical Index (Page 10-1) to find the part number. Turn to the page listed and locate the part as indicated by the item number.

GENERAL:

The assembly breakdowns include part numbers, descriptions, quantities required, keys and footnotes to help in selecting correct parts.

6. Parts Supersession Information. Part numbers that have this history will be displayed in the parts list in the order that they were superseded (from oldest to newest). The superseded part numbers will be shown with a line through them.

   Five periods in the PART NO. column (. . . . .) indicate that the part is either *Not Serviced Separately* or there is a reference to another figure. A figure reference is denoted by a pointing hand followed by a figure number in the DESCRIPTION column (☞Figure 10)
7. Keys are used to show two or more similar assemblies, RH and LH assembly parts, etc. Select the appropriate key, "A", "B", "C", "D", or "E" and the corresponding quantity column to find the required parts. Two periods in the QTY column (..) indicate that the part is not used for that assembly.
8. Indented descriptions under the DESCRIPTION column are used to indicate assemblies and subparts of assemblies. In the example on the previous page, *BEARING CAP* (Item 2) is a subpart of the major assembly *CASE*.
9. Quantities shown are for one assembly. The quantities of the subpart *BEARING CAP* are indicated as two and two. This means two per *CASE* assembly.
10. Serial number breaks identify the most current parts information and are shown as follows:
    → **S/N D001H2628**
    Indicates last serial number affected.
    S/N D001H2629 →
    Indicates the first serial number affected.
    S/N D001H1553 ↔ S/N D001H3291
    Indicates a range of serial numbers affected.

    ECN numbers for pending serial numbers are shown to allow for the inclusion of the most current parts information and are identified as follows:
    → **S/N Pending Per ECN 63243**
    Indicates a pending serial number for last unit affected.
    S/N Pending Per ECN 63243 →
    Indicates a pending serial number for first unit affected.

    Date breaks are used to indicate when a change occurred but a subsequent serial number break was not recorded. This is an arbitrary date usually based on the ECN release and are identified as follows:
    → **D/B 3/00**
    Indicates that a change occurred sometime within that month for the item affected.
    D/B 3/00 →
    Indicates that a change occurred sometime within that month for the item affected.
    D/B 3/00 ↔ D/B 4/00
    Indicates a range of production dates of the item affected.

    Contact your local dealer for Hyster lift trucks for serial number information for items with a ECN or a date break.

ORDERING PARTS:

When ordering replacement parts, give the unit serial number, part number, name of part and quantity required.

For any further information on parts, service, or ordering, consult your local dealer for Hyster lift trucks.

©2015 HYSTER COMPANY

IDENTIFICATION OF TRUCK SERIAL NUMBERS

X	OOO	X	OOOO	X
(1)	(2)	(3)	(4)	(5)

(1) and (2) The first letter and three numbers indicate the truck unit code.

(3) The second letter indicates the plant of manufacture.

(4) The four or five digit number indicates the production sequence number of the truck.

(5) The final letter indicates the year of manufacture starting with "A" in 1957, 1980, and 2003. The letters "I", "O", and "Q" will not be used.

For pending serial numbers contact your local dealer for Hyster lift trucks.

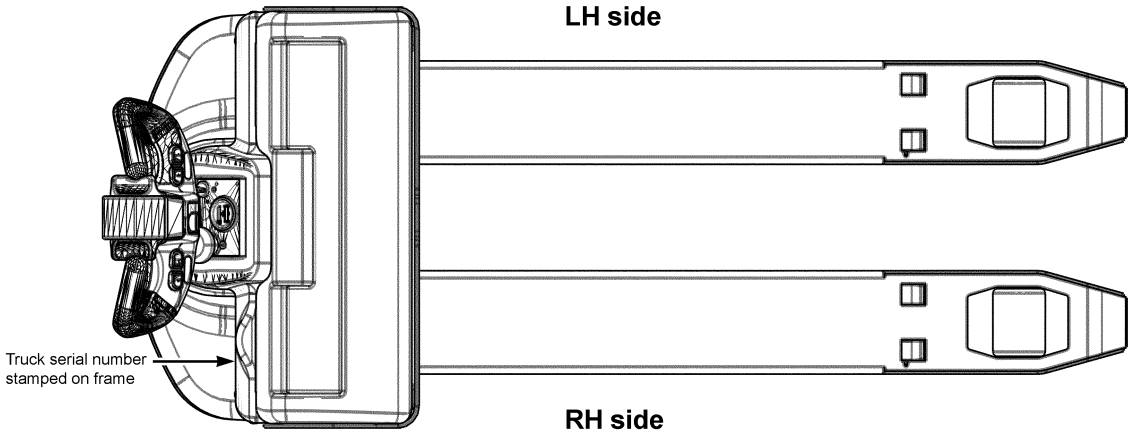

BP990011

Parts referred to in this book as right or left hand parts are in accordance with the illustration above.

PUBLICATIONS

Every new lift truck is provided with an OPERATING MANUAL. This manual has information that the operator must know for inspection and operation of the lift truck.

SERVICE MAINTENANCE MANUALS, which provide service and overhaul procedures, and PARTS MANUALS with complete replacement part identification, are available at a nominal fee from your Hyster dealer to assist users in effectively maintaining Hyster lift trucks in a safe, useful condition. See the list below for information on ordering specific publications for this model lift truck.

PUBLICATION	HYSTER PART NUMBER
Operating Manual (North America)	Not Available
Operating Manual (Europe)	
Service Manual (Complete) (North America)	Not Available
Service Manual (Complete) (Europe)	4020165
Parts Manual	

©2015 HYSTER COMPANY

1 FRAME/DRIVE UNIT

SECTION 1
FRAME/DRIVE UNIT

DESCRIPTION	PAGE
BATTERY COMPARTMENT	
LATERAL BATTERY REMOVAL - OPTION	1-6
VERTICAL BATTERY REMOVAL	1-4
BATTERY STOP	1-8
CASTER WHEELS	1-34
COVERS	1-2
KIT-GEAR AND PINION	
S/N D439T03591L →	1-26
LABEL	1-38
OPTION - ONLY FOR SUNLIGHT BATTERY	1-39
LABELS	1-36
LOAD BACKREST	
VERTICAL BATTERY REMOVAL - OPTION	1-10
MASTER DRIVE UNIT	
→ S/N D439T03590L	1-12
S/N D439T03591L →	1-14
REDUCTION UNIT	
→ S/N D439T03590L	1-20
S/N D439T03591L →	1-24
STEERING MOTOR	1-27
SUPPORT AND CASTER WHEELS	
LINKED	1-30
SUPPORTS AND CASTER WHEELS	
INDEPENDENT	1-32
TRACTION MOTOR	
→ S/N D439T03590L	1-16
S/N D439T03591L →	1-18
WHEEL PROTECTION	
OPTION	1-28

©2015 HYSTER COMPANY

COVERS (FIGURE 1-1)

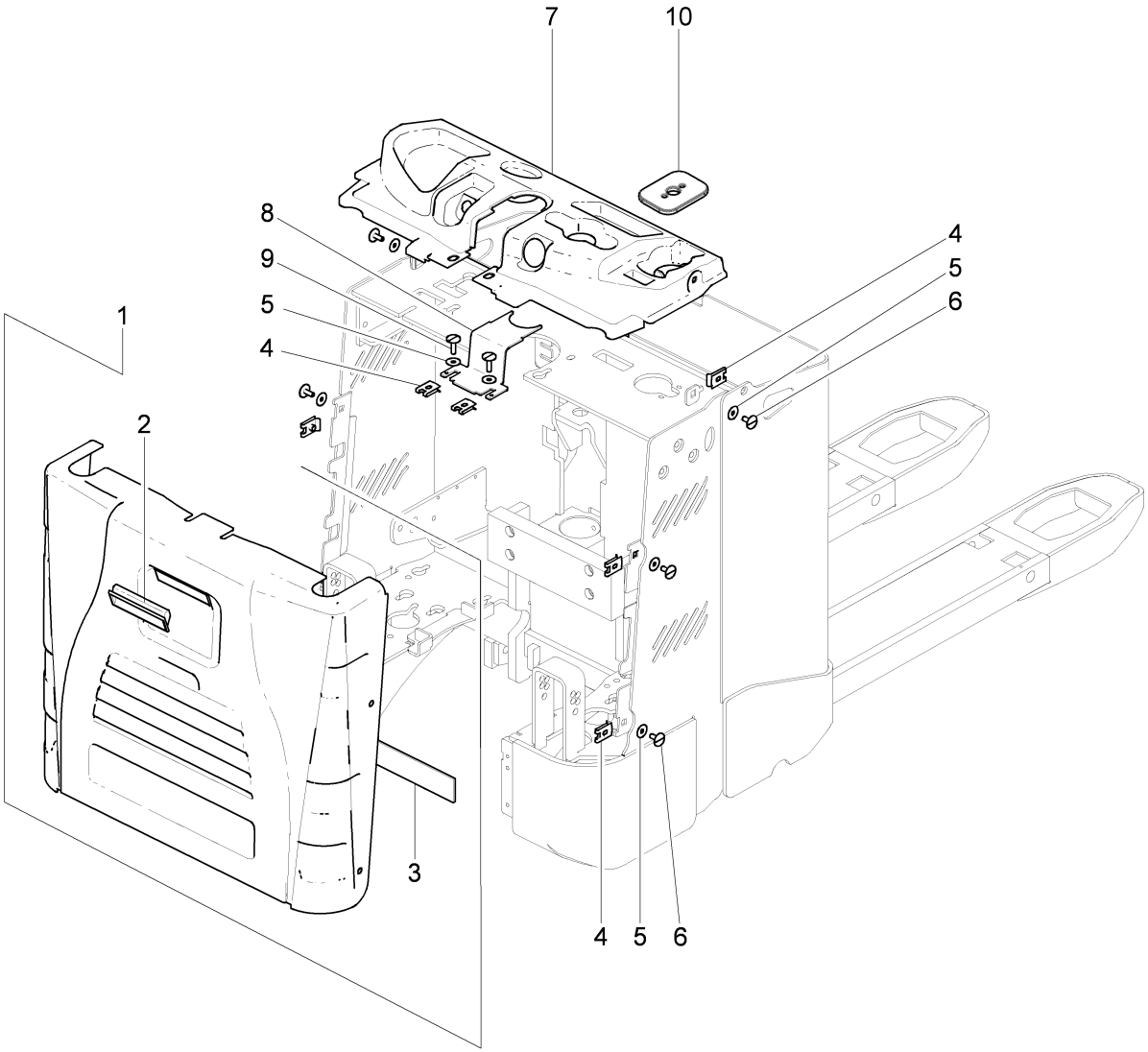

BP120728

©2015 HYSTER COMPANY

COVERS

ITEM	PART NO.	DESCRIPTION	QTY
1	**d** 1591020	Motor Cover	1
1	**e** 1591021	Motor Cover	1
2	1569777	Handle	1
3	1619391	Protector (Rubber)	1
4	1585574	Nut , Clip	8
5	1608780	Washer	8
6	1587878	Screw	6
7	4009320	Cover (Standard)	1
7	**af** 4009321	Cover	1
7	**bf** 4009320	Cover (Standard)	1
7	**cf** 4009321	Cover	1
8	1593755	Steel Plate	1
9	1608782	Screw	2
10	4005214	Foam Rubber	1

FOOTNOTES:

a For models with key pad
b For models with MDI
c For models with MDI and key pad
d For models with side gates
e For models without side gates
f OPTION

©2015 HYSTER COMPANY

BATTERY COMPARTMENT (FIGURE 1-2)
VERTICAL BATTERY REMOVAL

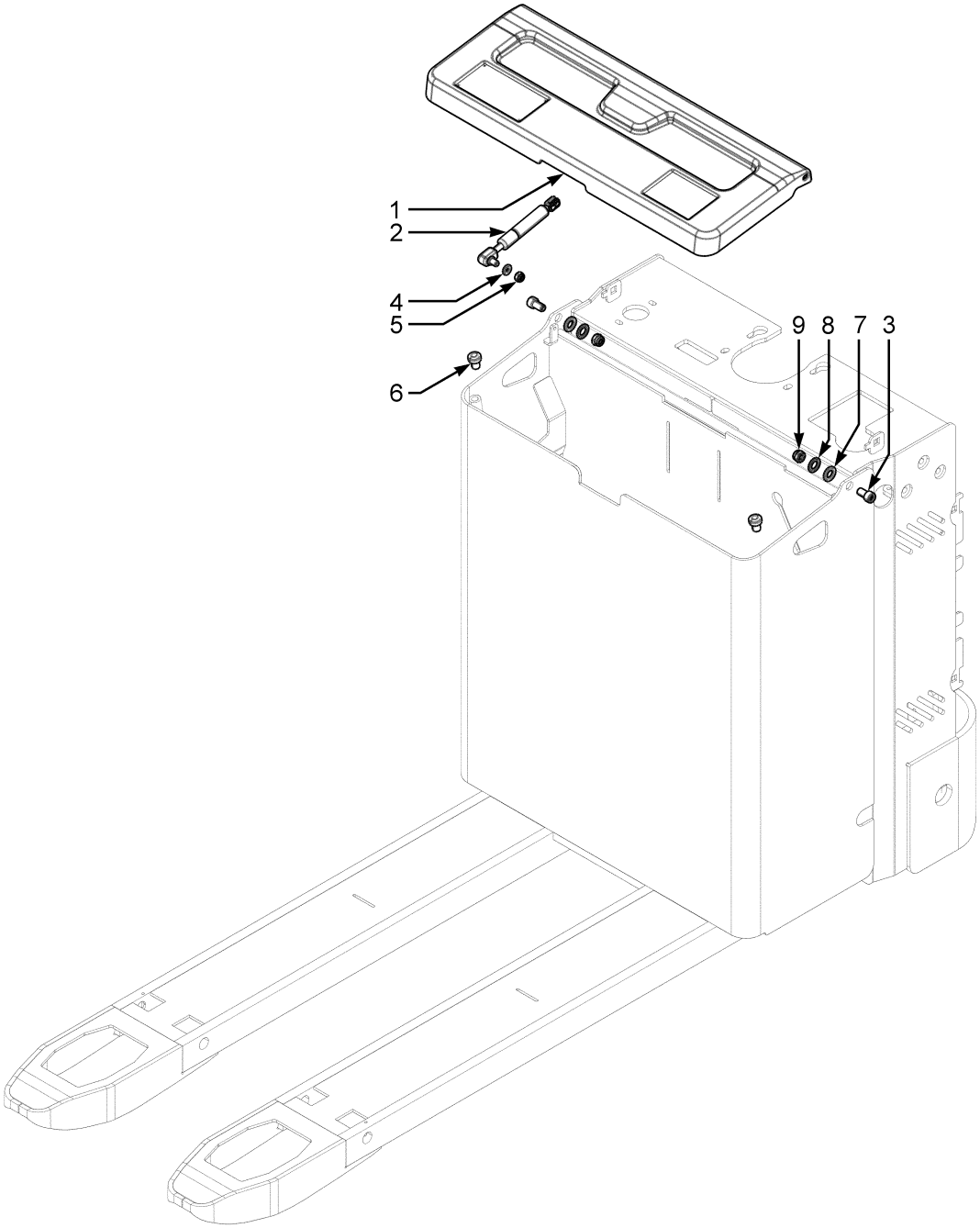

BP121062

©2015 HYSTER COMPANY

BATTERY COMPARTMENT
VERTICAL BATTERY REMOVAL

ITEM	PART NO.	DESCRIPTION	QTY
1	**a** 1595561	Cover	1
1	**b** 1595563	Cover , Battery	1
1	**c** 1595565	Cover	1
2	1587876	Gas Spring	1
3	1595773	Capscrew	2
4	320157	Washer	1
5	302400	Nut	1
6	2799069	Puffer	2
7	1580617	Washer	2
8	1608240	Washer	2
9	2076906	Locknut	2

FOOTNOTES:

a For models with battery 300 Ah
b For models with battery 400 Ah
c For models with battery 500 Ah

©2015 HYSTER COMPANY